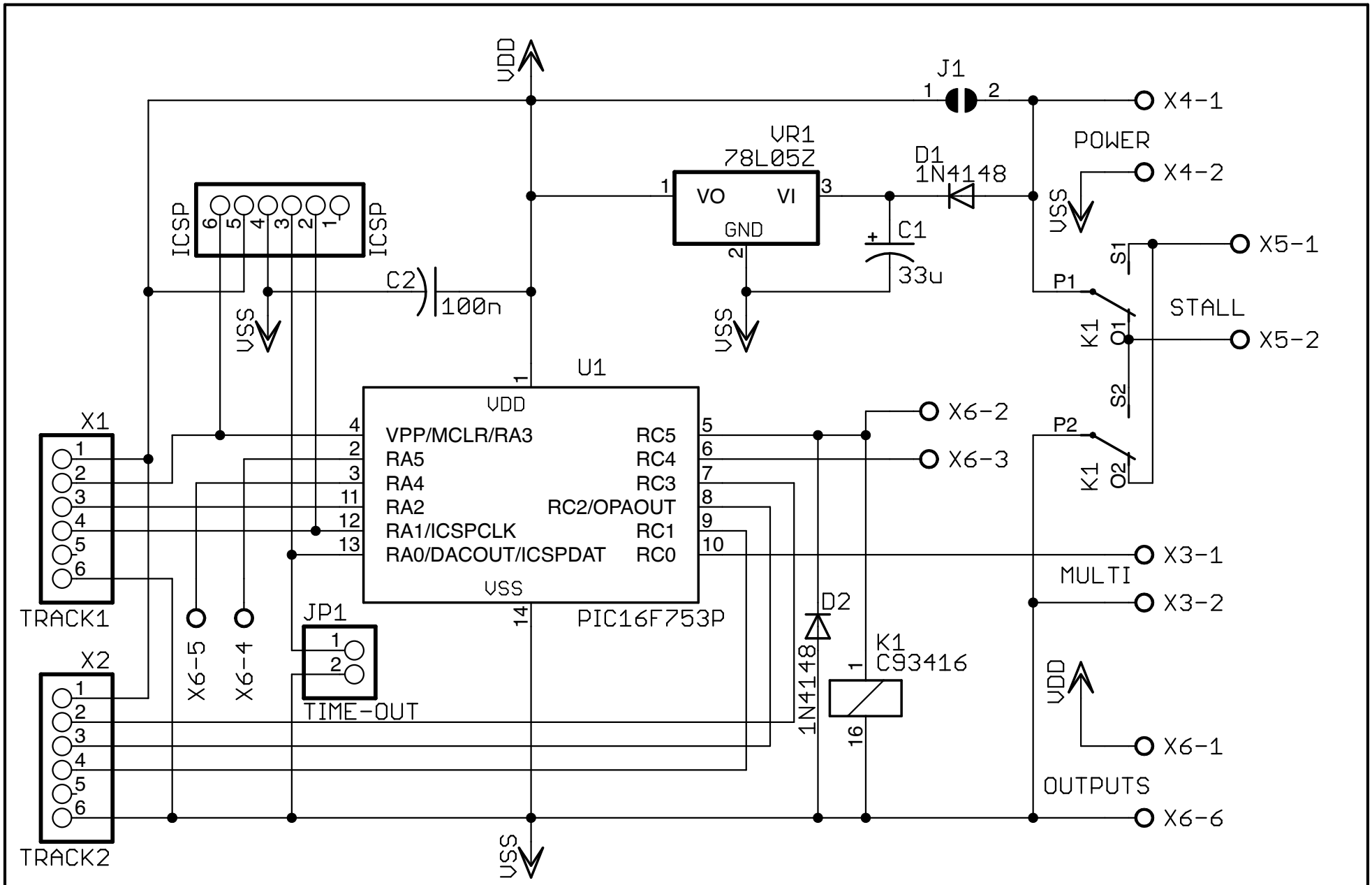

Copyright 2016 DAXaCK Circuits4Tracks

Hobbyists may use design for personal not-for-profit use only.

PRODUCT: Grade Crossing Controller	
PRODUCT VERSION: 1.00	PRODUCT CODE: GCC
DRAWING REVISION: 1	DATE: 2 March, 2016